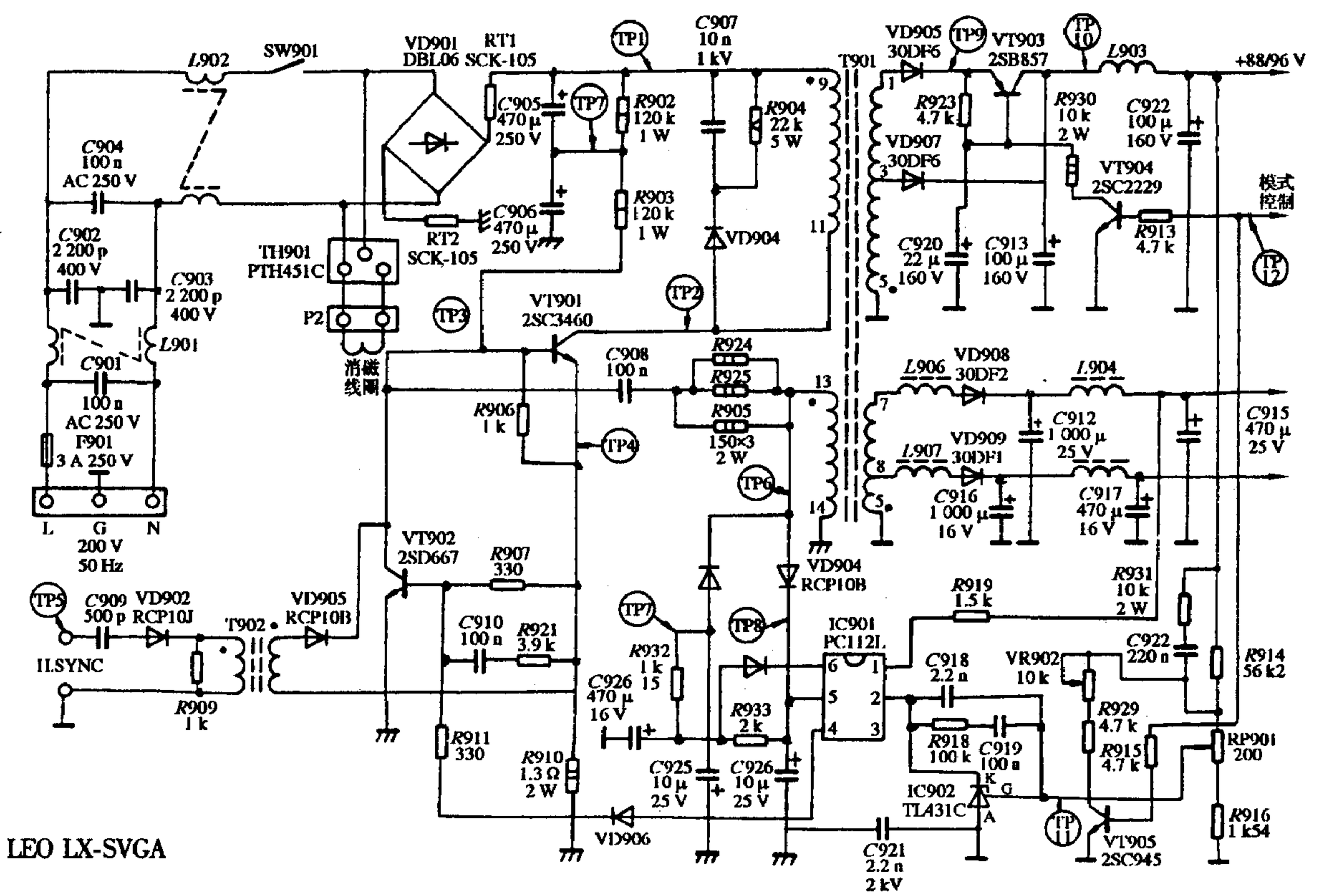
L902
SW901
VD901
DBL06
RT1
SCK-105
TP1
C907
10 n
1 kV
T901
VD905
30DF6
TP9
VT903
2SB857
TP10
L903
+88/96 V
C904
100 n
AC 250 V
C905
470 µ
250 V
TP7
R902
120 k
1 W
R904
22 k
5 W
R923
4.7 k
R930
10 k
2 W
C922
100 µ
160 V
VD907
30DF6
VT904
2SC2229
模式
控制
C902
2 200 p
400 V
C903
2 200 p
400 V
TH901
PTH451C
RT2
SCK-105
C906
470 µ
250 V
R903
120 k
1 W
VD904
C920
22 µ
160 V
C913
100 µ
160 V
R913
4.7 k
TP12
P2
TP3
VT901
2SC3460
TP2
L901
C901
100 n
AC 250 V
消磁
线圈
C908
100 n
R924
R925
R905
150×3
2 W
L906
VD908
30DF2
L904
R906
1 k
TP4
TP6
C912
1 000 µ
25 V
C915
470 µ
25 V
F901
3 A 250 V
L907
VD909
30DF1
C916
1 000 µ
16 V
C917
470 µ
16 V
L G N
200 V
50 Hz
VT902
2SD667
R907
330
VD904
RCP10B
R931
10 k
2 W
TP5
C909
500 p
VD902
RCP10J
VD905
RCP10B
T902
C910
100 n
R921
3.9 k
TP7
TP8
R919
1.5 k
IC901
PC112L
C922
220 n
R914
56 k2
ILSYNC
R932
1 k
15
C926
470 µ
16 V
R933
2 k
C918
2.2 n
VR902
10 k
R909
1 k
R911
330
R910
1.3 Ω
2 W
C925
10 µ
25 V
C926
10 µ
25 V
R918
100 k
C919
100 n
R929
4.7 k
R915
4.7 k
RP901
200
IC902
TL431C
K
G
A
TP11
VT905
2SC945
R916
1 k54
VD906
C921
2.2 n
2 kV

LEO LX-SVGA